SPARE PARTS LIST / DRAWINGS

BATTERY - POWERED PLASTIC STRAPPING TOOL MODEL DYNAMIC 2100

43.3301.01

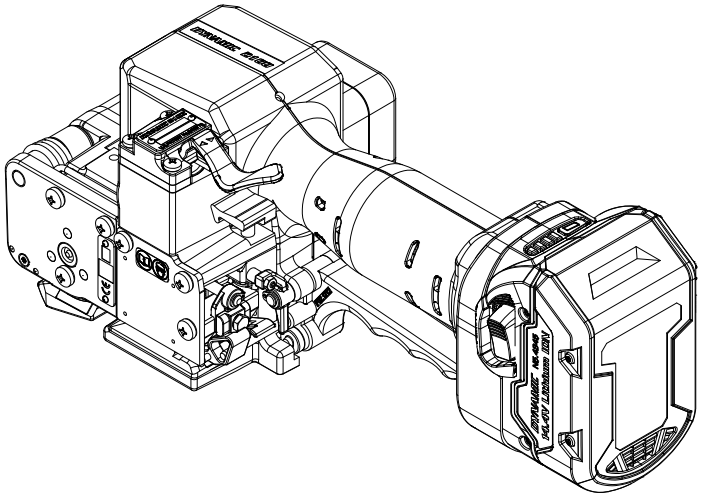

43330101.een/AS/05.21

© 2021 FROMM Holding AG
All rights reserved. Reproduction and duplication - also in extracts - are not permitted.

1 Spare parts list 43.3301.01

43.3301.01	DYNAMIC 2100/13/0.40-0.64			DYNAMIC 2100.01		23.04.20
Item-No.		**in group**	**Pcs.**	**Description**	**Dimension**	**Field**
N1.1305			2	SCREW	M4 X 7.8	D8
N1.1553		P32.1250	1	HEXAGON SCREW	M4 X 8	C12
N1.1904			5	SCREW	M5 X 20	C6+
N1.1909			2	FLAT HEAD SCREW	M3 X 5	D3
N1.1925		P32.0232	4	SCREW	M4 X 20	A7+
N1.1929			1	SCREW	M5 X 50	D12
N1.1934		P32.0232	6	FLAT HEAD SCREW	M4 X 50	A19+
N1.1948		P32.0232	1	SCREW	M3 X 35	B16
N1.2112		P32.0118	3	COUNTERSUNK SCREW	M4 X 10	B15
N1.2216			1	COUNTERSUNK SCREW	M3 X 8	D4
N1.2223			1	COUNTERSUNK SCREW	M3 X 6	C5
N1.3150		P32.1414	1	SOCKET SET SCREW	M3 X 8	C24
N1.5120		P32.1414	1	HEXAGON NUT	M3	C24
N1.6331		P32.0232	4	SPACER WASHER	6 X 12 X 0.5	C22+
N1.6503			6	SAFETY WASHER	M5	C6+
N1.6504			2	SAFETY WASHER	M4	D9
N1.6504		P32.0232	10	SAFETY WASHER	M4	A7+
N1.6504		P32.1250	1	SAFETY WASHER	M4	C11
N1.6505			2	SAFETY WASHER	M3	D3
N1.6505		P32.0232	1	SAFETY WASHER	M3	B16
N1.7206		P32.1139	2	PT-SCREW	2.2 X 10	D20+
N1.7207		P32.0232	4	PT-SCREW	3 X 40	A20+
N1.7208		P32.0232	5	PT-SCREW	3 X 14	A21
N2.1118			1	SECURITY RING	6	C24
N2.1121			1	SECURITY RING	5	C11
N2.1121		P32.0232	4	SECURITY RING	5	D9+
N2.1606			1	SPRING RING	SW6	A21
N2.1610		P32.0232	1	SPRING RING	SB44	B15
N2.1801		P32.0232	1	TENSIONING RING	4	C14
N2.2110		P32.1401	1	PARALLEL PIN	4 m6 X 10	B2
N2.2119		P32.0140	1	PARALLEL PIN	4 m6 X 18	C17
N2.2122		P32.0140	2	PARALLEL PIN	3 h6 X 14	C17
N2.2145		P32.0118	3	PARALLEL PIN	4 h6 X 18	C16
N2.2187		P32.0110	2	PARALLEL PIN	3 m6 X 6	C4
N2.2187		P32.1401	1	PARALLEL PIN	3 m6 X 6	A3
N2.2188		P32.1401	3	PARALLEL PIN	5 h6 X 34	B2+
N2.2189		P32.0136	4	PARALLEL PIN	3 m6 X 5	D3
N2.2190		P32.0232	2	PARALLEL PIN	6 h6 X 18	C22
N2.2193			1	PARALLEL PIN	3 m6 X 32	C10
N2.2443		P32.0139	1	DOWEL PIN	4 X 15	A8
N2.3342		P32.0232	1	FEATHER KEY	2 X 2 X 10	C2
N2.4902			4	HAMMER HEAD BOLT	1.85 X 4.76	C6+
N2.5157		P32.0232	2	PRESSURE SPRING	0.6 X 4.8 X 20/15.5	C9
N2.5178			2	PRESSURE SPRING	0.32X2.82X20.5/20.5	D10
N2.5235		P32.0232	1	PRESSURE SPRING	0.5 X 4.50 X 42.4/28.5	C18
N2.5237			1	PRESSURE SPRING	0.8 X 4.8 X 25/18.5	C10
N2.5294		P32.0139	1	PRESSURE SPRING	2.5 X 15 X 46.5/9.5	B9
N2.5295		P32.0232	1	PRESSURE SPRING	1.5 X 21 X 27/5.5	B9
N2.5296		P32.0232	1	PRESSURE SPRING	0.5 X 4 X 24/16.5	C9
N2.5822		P32.0232	1	TORSION SPRING	1.25 X 12/3.75	D15

[ ] = Group * = Wearing parts

© 2021 FROMM Holding AG
All rights reserved. Reproduction and duplication - also in extracts - are not permitted.

43.3301.01	DYNAMIC 2100/13/0.40-0.64			DYNAMIC 2100.01		23.04.20
Item-No.		**in group**	**Pcs.**	**Description**	**Dimension**	**Field**
N2.5823			1	TORSION SPRING	2.8 X 17/4	D4
N3.1134		P32.0232	1	BALL BEARING	7 X 22 X7	D21
N3.1134		P32.1021	1	BALL BEARING	7 X 22 X7	C22
N3.1157		P32.0118	1	BALL BEARING	30 X 42 X 7	C17
N3.1158		P32.0107	1	BALL BEARING	8 X 16 X 5	B23
N3.1159		P32.0232	2	BALL BEARING	6 X 19 X 6	C22
N3.1160		P32.0119	1	BALL BEARING	40 X 52 X 7	A14
N3.1172			2	BALL BEARING	30 X 42 X 7	B3+
N3.1178		P32.0120	1	BALL BEARING	35 X 44 X 5	A14
N3.1702		P32.0232	6	BALL	4 MM	D9
N3.2105		P32.0118	3	NEEDLE CAGE	K 4 X 7 X 7 TN	B16
N3.2106			3	NEEDLE CAGE	K 5 X 8 X 10 TN	B3
N3.2346		P32.0110	1	NEEDLE CASE	8 X 12 X 8	C5
N3.2347		P32.0144	2	NEEDLE BUSH	10 X 14 X 12	C21
N3.3172		P32.0136	3	SLIDE-BEARING	8 X 10 X 10	C3
N3.3172		P32.1401	1	SLIDE-BEARING	8 X 10 X 10	C1
N3.3174		P32.0139	2	SLIDE-BEARING	4 X 5.5 X 6	A8+
N3.3174		P32.1141	1	SLIDE-BEARING	4 X 5.5 X 6	C21
N3.4509	*	P32.1015	1	NEEDLE FREE WHEELING	6 X 10 X 15	C16
N4.1803		P32.0142	2	THRUST PIECE		B7+
N4.9159			1	LABEL	<<CE>>	C6
N41.9127			1	ADHESIVE LABEL	20 X 10 X 0.1	D12
N41.9160		P32.0232	2	ADHESIVE LABEL	14.4 VOLT	A21+
N43.9164			1	ADHESIVE LABEL	WEEE	B20
N44.9141			1	ADHESIVE LABEL	<<DYNAMIC 2100>>	A21
N44.9185			1	TYPE PLATE		A7
N44.9192		P32.0232	1	ADHESIVE LABEL		--
[N5.1129]	*	P32.0107	1	ELECTRIC MOTOR		B24
[N5.1129]	*	P32.0108	1	ELECTRIC MOTOR		A19
N5.2322		P32.1139	2	MICRO SWITCH		D20
N5.2702			1	COVER		B20
N5.2702		P32.0232	1	COVER		B20
N5.4343		P32.0195	1	CONNECTING PLATE		A24
N6.6271		P32.0107	1	O-RING	17 X 3.0	B24
N6.6271		P32.0108	1	O-RING	17 X 3.0	A20
P30.1158			1	GUIDE PIN		D10
P30.1164			1	GUIDE PIN		D10
[P32.0107]		P32.0232	1	WELDING MOTOR		B24
[P32.0108]		P32.0232	1	TENSIONING MOTOR		A19
[P32.0110]			1	END COVER		B6
[P32.0118]		P32.0232	1	IDLER STEP		B15
[P32.0119]		P32.0232	1	GEAR WHEEL		A13
[P32.0120]		P32.0232	1	WHEEL		A14
[P32.0136]			1	TENSIONING BODY		D2
[P32.0139]		P32.0232	1	SPRING PACKAGE		A9
[P32.0140]		P32.0232	1	INSERT PART		C17
[P32.0142]		P32.0232	1	LEVER		B7
[P32.0144]		P32.0232	1	ROCKER		D22
[P32.0195]		P32.0232	1	ENERGY TRANSMISSION		A23
[P32.0232]			1	BASE MODEL		C1+
P32.1003		P32.1401	1	SWIVEL SHAFT		C2
P32.1011		P32.0232	2	FELT		C8+

[ ] = Group * = Wearing parts

© 2021 FROMM Holding AG
All rights reserved. Reproduction and duplication - also in extracts - are not permitted.

43.3301.01	DYNAMIC 2100/13/0.40-0.64			DYNAMIC 2100.01		23.04.20
Item-No.		in group	Pcs.	Description	Dimension	Field
P32.1012		P32.0232	1	PUSHER		C7
P32.1014		P32.0232	1	SHAFT		C16
[P32.1015]		P32.0232	1	RATCHET WHEEL		C15
P32.1016		P32.1015	1	GEAR WHEEL		C15
P32.1018		P32.0232	1	CARTRIDGE		B18
[P32.1021]		P32.0232	1	WELDING EXCENTRIC		D22
P32.1022		P32.1021	1	WELDING EXCENTRIC		C22
P32.1023		P32.1021	1	PINION		C22
P32.1024		P32.0144	1	ROCKER		C22
P32.1027		P32.0232	1	BALL CAGE		D9
P32.1028		P32.0232	1	BOLT		D10
P32.1029		P32.0232	1	THRUST PIECE		C10
P32.1032		P32.0232	1	DRIVING PIN		D10
P32.1035		P32.0232	2	DRIVER		D9+
P32.1037		P32.0232	2	GEAR WHEEL		C22
P32.1044		P32.0118	1	PLANET SHAFT		C16
P32.1046		P32.0118	3	IDLER GEAR		B15
P32.1047		P32.0118	1	COVER		B15
P32.1048		P32.0120	1	WHEEL		A14
P32.1049		P32.0119	1	GEAR WHEEL		A13
P32.1050		P32.0232	1	FRONT TOGGLE LINK		C2
P32.1051		P32.0232	1	LEVER		C16
P32.1052		P32.0232	1	STANCHION		C15
P32.1053	*	P32.0232	1	WELDING GRIPPER		D10
P32.1105		P32.1139	1	RETAINER		D20
P32.1106		P32.1139	2	TURNING BUTTON		C20
P32.1107		P32.0195	1	MOTOR SUPPORT		A24
P32.1108		P32.0195	1	BUSBAR		B22
P32.1119		P32.0107	1	PINION		B23
P32.1120		P32.0107	1	FELT WASHER		B23
P32.1121		P32.0107	2	TORSIONAL STOP		B24
P32.1121		P32.0108	2	TORSIONAL STOP		A20
P32.1122		N5.1129	1	RUBBER BUSHING		A19
P32.1122		N5.1129	1	RUBBER BUSHING		A19
P32.1123		P32.0108	1	PINION		A20
P32.1124		P32.0232	1	INSERT		B19
P32.1126		P32.0195	1	PLUG SOCKET		B22
P32.1136		P32.0195	1	BUSBAR		B22
P32.1137		P32.0195	1	BUSBAR		A22
[P32.1139]		P32.0232	1	CIRCUIT BOARD	14.4V	C21
[P32.1141]		P32.0232	1	MOTOR HOUSING		A22
P32.1142		P32.0232	1	MOTOR HOUSING		C23
P32.1143		P32.0232	1	MOTOR COVER		B19
P32.1201			1	STEEL INSERT		D7
P32.1203	*		1	WELDING STOP GRIPPER		D7
P32.1204	*		1	CUTTER		C10
P32.1206			1	GUIDE CASE		C11
P32.1208			1	CENTERING SLEEVE		C11
P32.1210			2	CENTERING SLEEVE		C11+
P32.1211			1	COVER		C12
P32.1212			1	HANDLE LEVER		C23
P32.1216			1	PRESSURE ROLLER		C2

[ ] = Group * = Wearing parts

© 2021 FROMM Holding AG
All rights reserved. Reproduction and duplication - also in extracts - are not permitted.

43.3301.01	DYNAMIC 2100/13/0.40-0.64			DYNAMIC 2100.01		23.04.20
Item-No.		**in group**	**Pcs.**	**Description**	**Dimension**	**Field**
P32.1217			3	IDLER GEAR		B4
P32.1218			3	DOWEL		B4
P32.1219	*		1	TENSIONING WHEEL		B4
P32.1222	*		1	GRIPPER		C3
P32.1223	*		1	GRIPPER		C3
P32.1224	*		1	GRIPPER		C3
P32.1228			1	HOLDER		C3
P32.1229			1	HOLDER		B3
P32.1234			1	STRAP STOP		D4
P32.1238		P32.0110	1	END COVER		C5
P32.1243			1	STRAP GUIDE		C4
P32.1248			1	SEESAW LEVER		C11
P32.1249			1	SEESAW LEVER		C10
[P32.1250]			1	PUSHER		C12
P32.1251		P32.1250	1	PUSHER		C11
P32.1252		P32.1250	1	THRUST PIECE		C11
P32.1254		P32.0136	1	TENSIONING BODY		C4
[P32.1401]		P32.0232	1	BODY		A2
P32.1402		P32.1401	1	BODY		A1+
P32.1403		P32.0139	1	SPRING BOLT		B9
P32.1404		P32.0139	1	SPRING SLIDE		A9
P32.1405		P32.0139	1	ROLLER		A9
P32.1406		P32.0142	1	LEVER		B7
P32.1407		P32.0232	1	COVER		B7
P32.1408		P32.0232	1	HOOK		B17
P32.1409		P32.0232	1	ARM		B16
P32.1410		P32.0232	1	PUSHER		C10
P32.1411		P32.0232	1	LEVER		C18
P32.1412		P32.0140	1	INSERT PART		C17
[P32.1414]			1	LEVER		C24
P32.1415			1	HANDLE SHAFT		C24
P32.1416		P32.0232	1	FIXING PLATE		A9
P32.1417		P32.0232	1	SWITCH ROCKER		B17
P32.1422		P32.1414	1	LEVER		C24

[ ] = Group

* = Wearing parts

© 2021 FROMM Holding AG
All rights reserved. Reproduction and duplication - also in extracts - are not permitted.

2 Drawing 43.3301.01

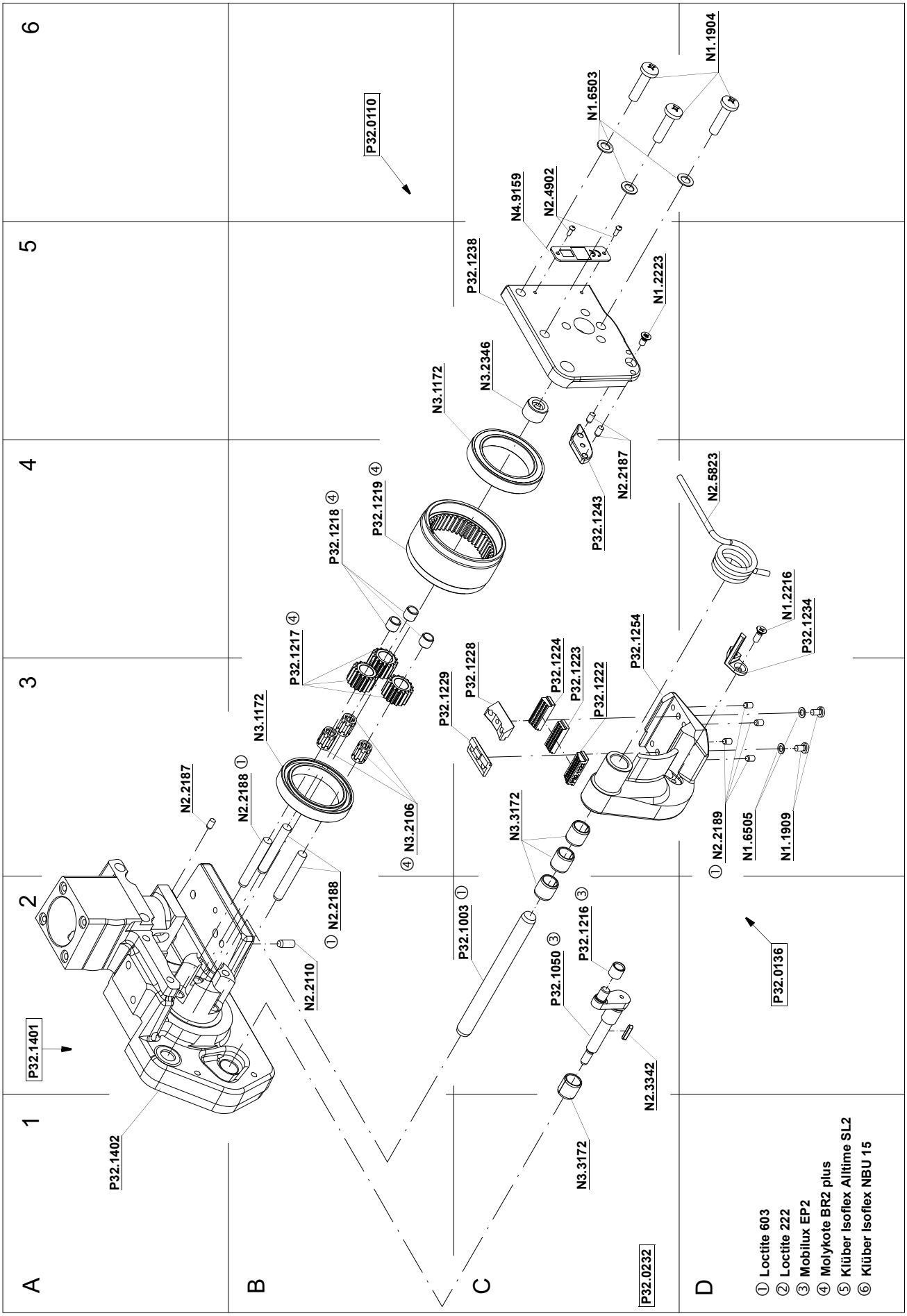

© 2021 FROMM Holding AG
All rights reserved. Reproduction and duplication - also in extracts - are not permitted.

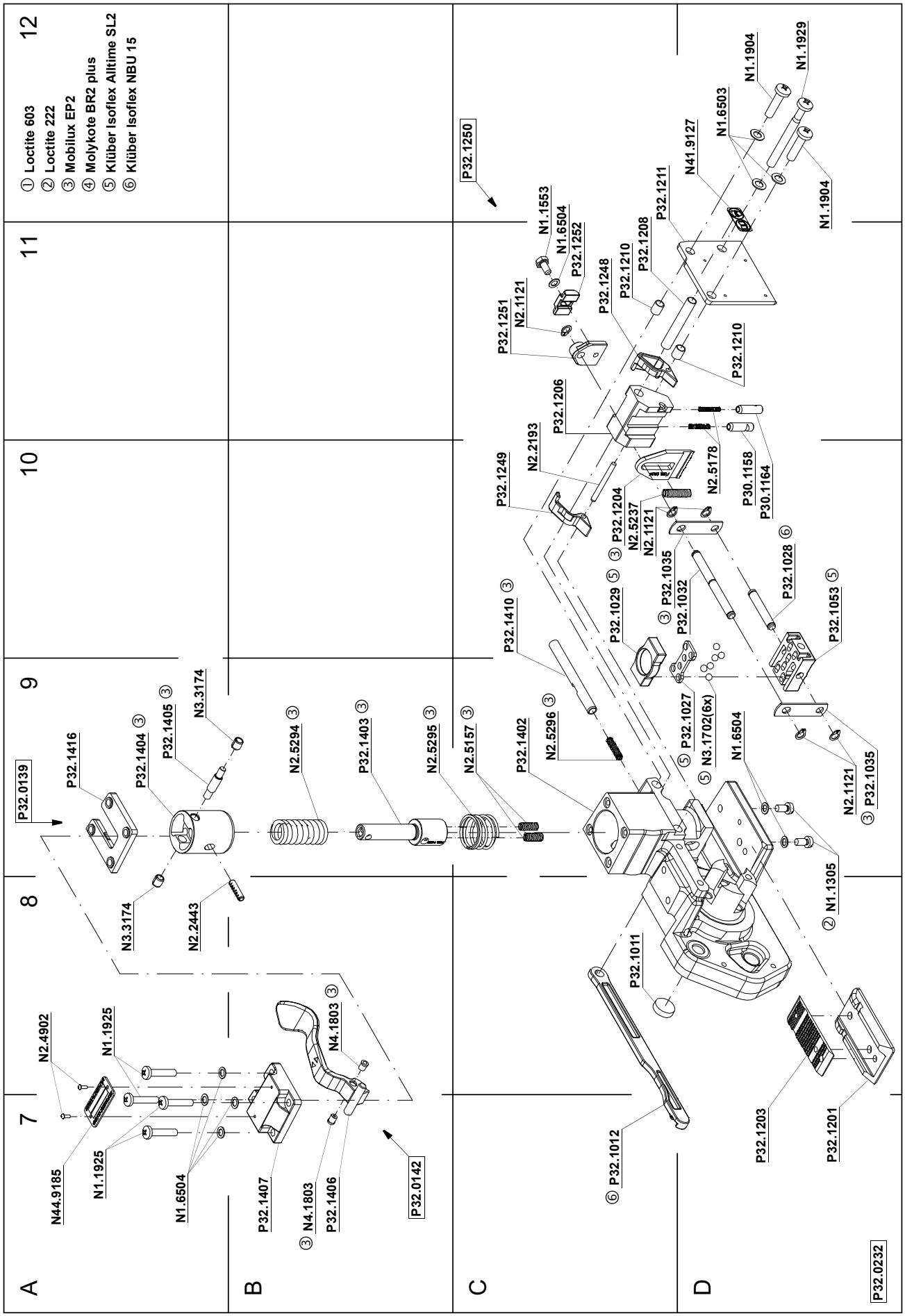

© 2021 FROMM Holding AG
All rights reserved. Reproduction and duplication - also in extracts - are not permitted.

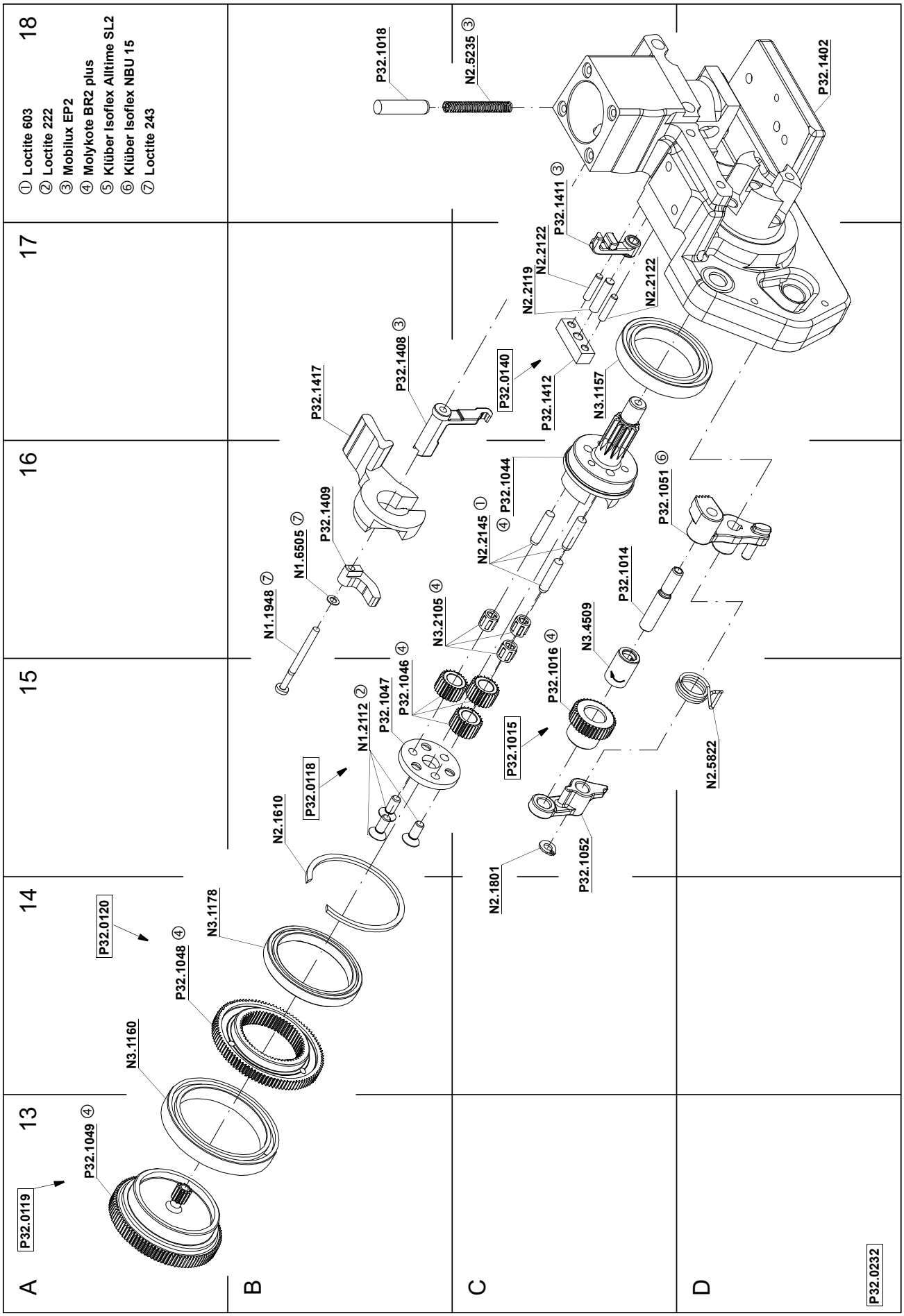

© 2021 FROMM Holding AG
All rights reserved. Reproduction and duplication - also in extracts - are not permitted.

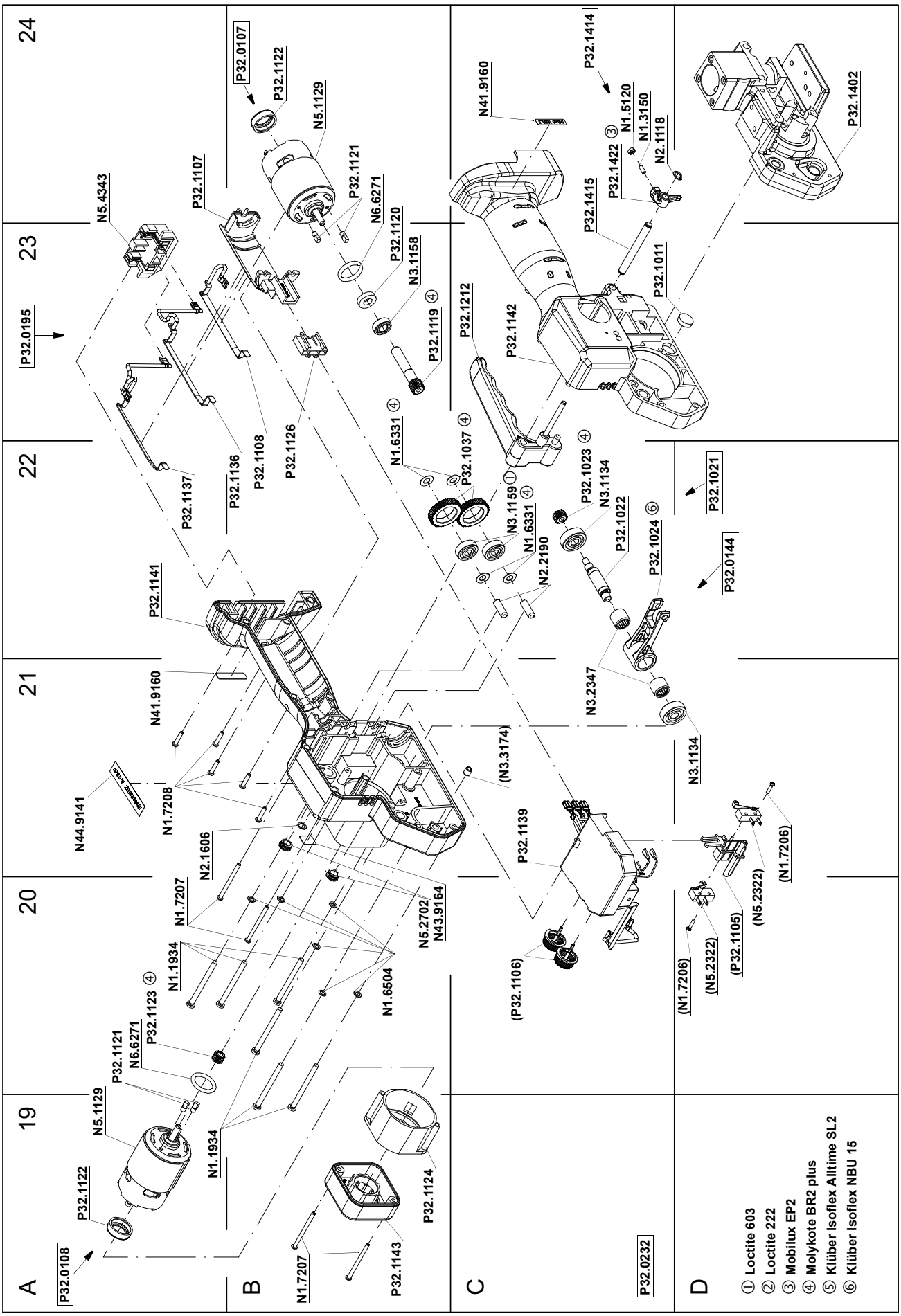

© 2021 FROMM Holding AG
All rights reserved. Reproduction and duplication - also in extracts - are not permitted.