SPARE PARTS LIST / DRAWINGS

PNEUMATIC PLASTIC STRAPPING TOOL MODEL P359

49.0523.01

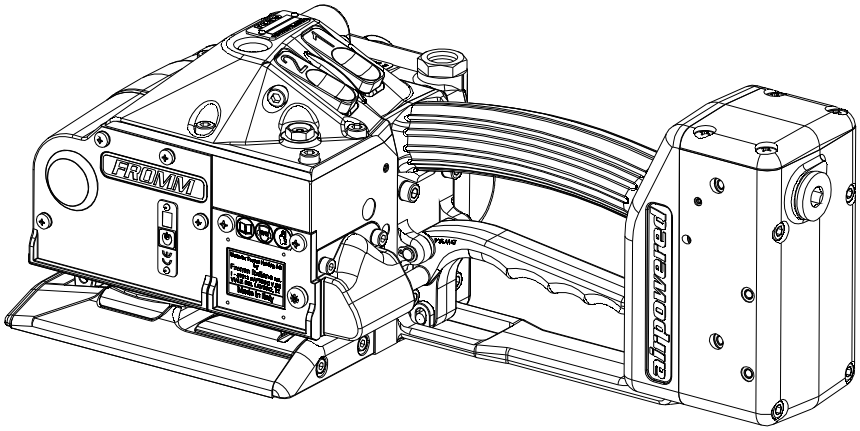

	Index	Page
1	**Spare parts list 49.0523.01**	**2**
2	**Drawing 49.0523.01**	**8**

49052301.een/MAS/02.21

© 2021 FROMM Holding AG
All rights reserved. Reproduction and duplication - also in extracts - are not permitted.

1 Spare parts list 49.0523.01

49.0523.01	P359/32/0.80-1.35/3.5			P359.0001.01		20.04.20
Item-No.		in group	Pcs.	Description	Dimension	Field
N1.1553		P35.0227	1	HEXAGON SCREW	M4 X 8	D14
N1.1813		P35.0212	4	RAISED CTRS. HEAD SCREW	M5 X 16	B25
N1.1919			2	SCREW	M4 X 16	C11
N1.1930		P35.0225	1	FLAT HEAD SCREW	M3 X 4	C4
N1.1944			4	SCREW	M4 X 60	D18
N1.1968			1	SCREW	M5 X 70	D12
N1.2163			1	COUNTERSUNK SCREW	M5 X 12	D22
N1.2186		P35.0225	2	COUNTERSUNK SCREW	M5 X 16	B1+
N1.2189		P35.0214	3	COUNTERSUNK SCREW	M4 X 20	B21
N1.2212		P35.0220	4	COUNTERSUNK SCREW	M4 X 25	A22
N1.2218			2	COUNTERSUNK SCREW	M4 X 12	B17
N1.3128			1	SOCKET SET SCREW	M4 X 8	D1
N1.5144		P35.0229	2	HEXAGON NUT	M12 X 1.25	D10
N1.5602		P35.0203	1	SLOTTED ROUND NUT	M10 X 1	A14
N1.6331			2	SPACER WASHER	6 X 12 X 0.5	C15+
N1.6384		P35.0220	1	SPACER WASHER	11 X 17 X 0.5	A20
N1.6503			20	SAFETY WASHER	M5	D2+
N1.6503		P35.0207	2	SAFETY WASHER	M5	A7+
N1.6503		P35.0212	4	SAFETY WASHER	M5	D24
N1.6504			16	SAFETY WASHER	M4	C11+
N1.6504		P35.0227	1	SAFETY WASHER	M4	D14
N11.1115			6	SCREW	M4 X 8	C14+
N11.1116			4	SCREW	M4 X 12	C14+
N11.1119			4	SCREW	M5 X 20	D21+
N11.1133			2	SCREW	M5 X 35	D2
N11.1147			11	SCREW	M5 X 16	A7+
N11.1193			2	FLAT HEAD SCREW	M5 X 55	D1+
N11.1193		P35.0212	4	FLAT HEAD SCREW	M5 X 55	D23
N2.1118			2	SECURITY RING	6	C11+
N2.1121			2	SECURITY RING	5	C11+
N2.1301		P35.0211	1	CIRCLIP	6	E23+
N2.1601		P35.0208	1	SPRING RING	SW12	D24
N2.1606			1	SPRING RING	SW6	C22
N2.1606		P35.0205	1	SPRING RING	SW6	D8
N2.1614		P35.0220	1	SPRING RING		A21
N2.2101			2	PARALLEL PIN	5 m6 X 12	B14
N2.2101		P35.0212	1	PARALLEL PIN	5 m6 X 12	E25
N2.2102			1	PARALLEL PIN	5 m6 X 16	B5
N2.2110		P35.0201	1	PARALLEL PIN	4 m6 X 10	C13
N2.2119		P35.0226	1	PARALLEL PIN	4 m6 X 18	C17
N2.2138		P35.0234	1	PARALLEL PIN	4 m6 X 12	B21
N2.2142		P35.0207	1	PARALLEL PIN	4 m6 X 28	B8
N2.2147		P35.0201	2	PARALLEL PIN	3 m6 X 10	C19
N2.2154			1	PARALLEL PIN	5 h6 X 60	B17
N2.2162			2	PARALLEL PIN	3 m6 X 24	D13+
N2.2172		P35.0233	1	PARALLEL PIN	5 m6 X 30	A20
N2.2187		P35.0201	1	PARALLEL PIN	3 m6 X 6	C13
N2.2190			1	PARALLEL PIN	6 h6 X 18	B14
N2.2401		P35.0236	1	DOWEL PIN	3 X 10	B3
N2.2443		P35.0237	1	DOWEL PIN	4 X 15	A2

[ ] = Group * = Wearing parts

© 2021 FROMM Holding AG
All rights reserved. Reproduction and duplication - also in extracts - are not permitted.

49.0523.01	P359/32/0.80-1.35/3.5			P359.0001.01		20.04.20
Item-No.		in group	Pcs.	Description	Dimension	Field
N2.4902			4	HAMMER HEAD BOLT	1.85 X 4.76	A8+
N2.5123			1	PRESSURE SPRING	1 X 8 X 40/12.5	A20
N2.5157			2	PRESSURE SPRING	0.6 X 4.8 X 20/15.5	B14
N2.5178			2	PRESSURE SPRING	0.32X2.82X20.5/20.5	D13
N2.5296		P35.0220	1	PRESSURE SPRING	0.5 X 4 X 24/16.5	A21
N2.5604		P35.0225	2	CUP SPRING	31.5 X 16.3 X 1.25	A3+
N2.5628		P35.0229	2	CUP SPRING	25 X 12.2 X 1/1.8	D10
N21.2106		P35.0233	3	PARALLEL PIN	8 h6 X 50	B20
N21.2130		P35.0214	3	PARALLEL PIN	5 h6 X 20	B21
N21.5103			1	PRESSURE SPRING	0.5 X 4 X 31/21.5	C20
N21.5127			2	PRESSURE SPRING	1.1 X 9.0 X 50/14.5	B14
N21.5209		P35.0209	1	PRESSURE SPRING	0.7 X 7.5 X 35.8/11.5	C24
N21.5210			1	PRESSURE SPRING	0.8 X 6.1 X 46/17.5	C5
N21.5211			1	PRESSURE SPRING	0.75 X 4.5 X 24/15.5	D13
N21.5212		P35.0204	1	PRESSURE SPRING	0.5 X 3.7 X 26.5/18.5	D7
N21.5212		P35.0205	1	PRESSURE SPRING	0.5 X 3.7 X 26.5/18.5	D8
N21.5212		P35.0206	1	PRESSURE SPRING	0.5 X 3.7 X 26.5/18.5	B9
N21.5213		P35.0211	1	PRESSURE SPRING	0.32 X 8.5 X 17/6.5	E24+
N21.5220		P35.0208	1	PRESSURE SPRING	0.90 X 8.0 X 43.0/16.5	D24
N3.1134			1	BALL BEARING	7 X 22 X7	B15
N3.1134		P33.0115	1	BALL BEARING	7 X 22 X7	C15
N3.1159		P35.0137	1	BALL BEARING	6 X 19 X 6	C16
N3.1160		P35.0213	1	BALL BEARING	40 X 52 X 7	B21
N3.1174			1	BALL BEARING	7 X 19 X 6	C18
N3.1174		P35.0225	1	BALL BEARING	7 X 19 X 6	A2
N3.1702			10	BALL	4 MM	D1+
N3.2106		P35.0214	3	NEEDLE CAGE	K 5 X 8 X 10 TN	B21
N3.2111			6	NEEDLE CAGE	K 8 X 11 X 10 TV	C18
N3.2347		P35.0202	2	NEEDLE BUSH	10 X 14 X 12	C13
N3.3103		P35.0226	1	SLIDE-BEARING	10 X 12 X 20	C17
N3.3166		P35.0233	1	SLIDE-BEARING	10 X 12 X 12	A20
N3.3318		P35.0235	1	SLIDE-BEARING	8 X 10 X 4	B22
N3.4509	*	P35.0222	1	NEEDLE FREE WHEELING	6 X 10 X 15	B1
N3.4509	*	P35.0223	1	NEEDLE FREE WHEELING	6 X 10 X 15	A4
N3.4519		P35.0217	1	FREE-WHEELING	8 X 12 X 22	A19
N31.1121		P35.0218	1	BALL BEARING	45 X 58 X 7	B21
N31.1145		P35.0214	1	BALL BEARING	45 X 55 X 6	C20
N31.1148			2	BALL BEARING	40 X 52 X 7	C17+
N31.1150		P35.0225	1	BALL BEARING	8 X 19 X 6	C2
N31.1163		P35.0222	1	BALL BEARING	15 X 24 X 5	B2
N31.1163		P35.0225	4	BALL BEARING	15 X 24 X 5	A3+
N4.5137			2	PROTECTING CAP		E23+
N4.9159			1	LABEL	<<CE>>	D19
N41.9129			1	ADHESIVE LABEL	p max. 6 bar/87 psi	C2
N41.9140			1	ADHESIVE LABEL	30 X 10 X 0.1	D11
N44.9104			2	ADHESIVE LABEL	<<FROMM>>	D2+
N44.9185			1	TYPE PLATE		A8
N6.3223		P35.0207	1	PRESSURE READING		B7
N6.5136		P35.0212	1	SEALING SCREW		D24
N6.6117		P35.0204	3	SEAL	6 X 13 X 2.3	C7+
N6.6117		P35.0205	2	SEAL	6 X 13 X 2.3	C8+
N6.6117		P35.0206	3	SEAL	6 X 13 X 2.3	B9+

[ ] = Group * = Wearing parts

© 2021 FROMM Holding AG
All rights reserved. Reproduction and duplication - also in extracts - are not permitted.

49.0523.01	P359/32/0.80-1.35/3.5			P359.0001.01		20.04.20
Item-No.		in group	Pcs.	Description	Dimension	Field
N6.6117		P35.0208	4	SEAL	6 X 13 X 2.3	A24+
N6.6120		P35.0209	1	SEAL	16 X 9 X 2.3	C24
N6.6123		P35.0208	2	SEAL	12 X 19 X 2.3	C24
N6.6123		P35.0209	5	SEAL	12 X 19 X 2.3	A24+
N6.6157		P35.0211	1	PACKING RING	4 MM	E24+
N6.6163		P35.0221	1	SEAL	10 X 13.6 X 2.3	B5
N6.6192		P35.0203	1	SEAL	45 X 36 X 2.8	A14
N6.6211		P35.0225	2	O-RING	16 X 2	C3
N6.6214		P35.0222	2	O-RING	23 X 2	B2
N6.6214		P35.0225	3	O-RING	23 X 2	A3
N6.6217			2	O-RING	15 X 2	C3
N6.6217		P35.0205	3	O-RING	15 X 2	C8+
N6.6220		P35.0207	1	O-RING	40 X 2.5	C7
N6.6235		P35.0221	2	O-RING	12 X 2	B5
N6.6247		P35.0205	1	O-RING	5 X 2.5	C8
N6.6247		P35.0210	1	O-RING	5 X 2.5	D25
N6.6255		P35.0208	6	O-RING	21 X 2	B24+
N6.6255		P35.0209	6	O-RING	21 X 2	A24+
N6.6255		P35.0212	1	O-RING	21 X 2	C25
N6.6262			1	O-RING	32 X 2.0	D3
N6.6267		P35.0203	1	O-RING	10 X 2.0	A14
N6.6267		P35.0210	3	O-RING	10 X 2.0	C25+
N6.6267		P35.0212	1	O-RING	10 X 2.0	C25
N6.6268		P35.0221	1	O-RING	6 X 2.5	B5
N6.6283		P35.0201	1	O-RING	4 X 1	C6
N6.6283		P35.0211	1	O-RING	4 X 1	E24+
N6.6291		P35.0204	3	O-RING	11.5 X 1.5	C7+
N6.6291		P35.0206	3	O-RING	11.5 X 1.5	B9+
N6.6706		P35.0225	2	DIAPHRAGM		C3
N61.5606			1	REDUCING COUPLING		C2
N61.6208		P35.0211	2	O-RING	9.5 X 1.5	E24+
N61.6213		P35.0225	2	O-RING	45 X 1.5	A2+
N61.6219			1	O-RING	7 X 2	B5
P32.1022		P33.0115	1	WELDING EXCENTRIC		C15
P32.1027			1	BALL CAGE		C12
P32.1029			1	THRUST PIECE		B12
P32.1037		P35.0137	1	GEAR WHEEL		C15
P32.1123		P33.0115	1	PINION		C15
P32.1210			1	CENTERING SLEEVE		E9
P32.1251		P35.0227	1	PUSHER		D14
[P33.0115]			1	WELDING EXCENTRIC		B15
P33.1120		P35.0222	1	GEAR WHEEL		B1
P33.1236			1	GUIDE PIN		D14
P33.1237			1	GUIDE PIN		D14
P33.2229	*		1	TENSIONING WHEEL		C17
[P35.0137]			1	GEAR WHEEL		C16
[P35.0201]			1	BODY		B19
[P35.0202]			1	ROCKER		C12
[P35.0203]			1	PISTON		A13
[P35.0204]			1	VALVE		C7
[P35.0205]			1	VALVE		C9
[P35.0206]		P35.0207	1	VALVE		B10

[ ] = Group

* = Wearing parts

© 2021 FROMM Holding AG
All rights reserved. Reproduction and duplication - also in extracts - are not permitted.

49.0523.01	P359/32/0.80-1.35/3.5			P359.0001.01		20.04.20
Item-No.		in group	Pcs.	Description	Dimension	Field
[P35.0207]			1	COVER		A9
[P35.0208]		P35.0212	1	VALVE		A25
[P35.0209]		P35.0212	1	VALVE		A24
[P35.0210]		P35.0212	1	SHUTTLE VALVE		C25
[P35.0211]		P35.0212	2	THROTTLE		E23+
[P35.0212]			1	HANDLE		F25
[P35.0213]		P35.0220	1	GEAR WHEEL		A21
[P35.0214]		P35.0220	1	WHEEL		C21
[P35.0217]		P35.0220	1	RATCHET WHEEL		A19
[P35.0218]		P35.0220	1	GEAR WHEEL		B22
[P35.0220]			1	GEAR		A22
[P35.0221]			1	VALVE		C6
[P35.0222]		P35.0225	1	GEAR WHEEL		C1
[P35.0223]		P35.0225	1	CONICAL GEAR WHEEL		A4
[P35.0225]			1	AIR MOTOR		A1
[P35.0226]			1	END COVER		C17
[P35.0227]			1	PUSHER		D14
[P35.0229]			1	SUSPENSION		E10
[P35.0233]		P35.0220	1	GEAR BODY		B20
[P35.0234]		P35.0220	1	LEVER		B21
[P35.0235]		P35.0220	1	GEARING COVER		B22
[P35.0236]		P35.0225	1	END PLATE		B3
[P35.0237]		P35.0225	1	END PLATE		B1
P35.1317		P35.0210	1	VALVE STEM		D25
P35.1318		P35.0210	1	VALVE SHELL		D25
P35.1344			1	SLIDE GATE		D1
P35.1350		P35.0210	1	COUNTER SLEEVE		D25
P35.2058		P35.0211	1	THROTTLE BODY		E24+
P35.2060		P35.0211	1	THROTTLE SCREW		F24
P35.2064			1	HANDLE SHAFT		C21
P35.3143		P35.0204	2	SUSTAINING RING		C7+
P35.3143		P35.0206	2	SUSTAINING RING		B9+
P35.4101		P35.0201	1	BODY		B20
P35.4102		P35.0201	1	BOLT		B18
P35.4103			1	STEEL INSERT		B12
P35.4104	*		1	WELDING STOP GRIPPER		B12
P35.4105			1	STRAP GUIDE PLATE		C14
P35.4106		P35.0202	1	ROCKER		C13
P35.4107	*		1	WELDING GRIPPER		C12
P35.4108		P35.0203	1	PISTON ROD		A14
P35.4109		P35.0203	1	PISTON PLATE		A14
P35.4110			1	DRIVING PIN		D12
P35.4111			2	DRIVER		C11+
P35.4112		P35.0204	1	PUSHER		D7
P35.4113		P35.0204	1	EXHAUST RING		C7
P35.4114		P35.0204	1	GUIDE		D7
P35.4114		P35.0206	1	GUIDE		B9
P35.4115		P35.0205	1	VALVE RING		C8
P35.4116		P35.0205	1	SUSTAINING RING		C8
P35.4117		P35.0205	1	SUSTAINING RING		D8
P35.4118		P35.0205	1	DISK		D8
P35.4119		P35.0205	1	PUSHER		C8

[ ] = Group

* = Wearing parts

© 2021 FROMM Holding AG
All rights reserved. Reproduction and duplication - also in extracts - are not permitted.

49.0523.01	P359/32/0.80-1.35/3.5			P359.0001.01		20.04.20
Item-No.		in group	Pcs.	Description	Dimension	Field
P35.4121		P35.0206	1	DOWEL		C10
P35.4122		P35.0206	1	SLIDE BOLT		C10
P35.4123		P35.0207	1	COVER		B9
P35.4124			1	SEAL PLATE		E9
P35.4125			1	PUSHER		C20
P35.4126			1	BEARING SUPPORT		D15
P35.4127		P35.0212	1	HANDLE		F25
P35.4128		P35.0212	1	VALVE HOUSING		E25
P35.4129		P35.0212	1	COVER		C26
P35.4130		P35.0212	1	SEAL PLATE		E25
P35.4131		P35.0208	1	VALVE STEM		D24
P35.4132		P35.0208	1	INTERMEDIATE RING		A24
P35.4133		P35.0208	2	SUSTAINING RING		B24
P35.4134		P35.0208	1	END RING		C24
P35.4135		P35.0208	1	SUSTAINING RING		C24
P35.4136		P35.0208	1	SUSTAINING RING		C24
P35.4137		P35.0208	1	SUSTAINING RING		B24
P35.4138		P35.0209	1	END RING		A24
P35.4139		P35.0209	2	SUSTAINING RING		B24
P35.4140		P35.0209	1	SUSTAINING RING		A24
P35.4141		P35.0209	1	SUSTAINING RING		B24
P35.4142		P35.0209	1	INTERMEDIATE RING		C24
P35.4143		P35.0209	1	VALVE STEM		C24
P35.4144		P35.0209	1	CYLINDER		D24
P35.4145		P35.0211	1	THROTTLE SEAT		E24+
P35.4146			1	SEAL PLATE		C21
P35.4147			1	HANDLE LEVER		D21
P35.4149		P35.0233	1	GEAR BODY		A20
P35.4150		P35.0213	1	GEAR WHEEL		A21
P35.4151		P35.0214	1	GEAR WHEEL		B21
P35.4154		P35.0214	1	PLANET SHAFT		B20
P35.4155		P35.0214	3	PINION		B21
P35.4156		P35.0234	1	LEVER		B21
P35.4157		P35.0235	1	GEARING COVER		B22
P35.4158			1	ROCKER		A20
P35.4159		P35.0217	1	GEAR WHEEL		A19
P35.4160		P35.0218	1	GEAR WHEEL		B22
P35.4161		P35.0221	1	CONTROL ROD		C5
P35.4162		P35.0221	1	END RING		B5
P35.4163		P35.0221	1	VALVE SHELL		B5
P35.4164			1	SEAL PLATE		C5
P35.4165		P35.0207	2	SHAFT		A7+
P35.4166		P35.0207	1	LEVER		B7
P35.4167		P35.0207	1	LEVER		B7
P35.4168		P35.0223	1	CONICAL GEAR WHEEL		A4
P35.4170		P35.0236	1	END PLATE		B3
P35.4171		P35.0237	1	END PLATE		A2
P35.4172		P35.0225	2	SUPPORTING DISK		C2+
P35.4173		P35.0225	1	ROTOR		B3
P35.4174		P35.0225	1	JACKET		B3
P35.4175		P35.0225	1	MOTOR HOUSING		C5
P35.4176		P35.0225	2	RETAINER		C3

[ ] = Group * = Wearing parts

© 2021 FROMM Holding AG
All rights reserved. Reproduction and duplication - also in extracts - are not permitted.

49.0523.01	P359/32/0.80-1.35/3.5			P359.0001.01		20.04.20
Item-No.		**in group**	**Pcs.**	**Description**	**Dimension**	**Field**
P35.4177		P35.0222	1	COVER		B2
P35.4178		P35.0225	1	CONICAL GEAR WHEEL		C4
P35.4179			1	SIEVE		D4
P35.4180			2	SIEVE		C3
P35.4181			1	EXHAUST SILENCER		D3
P35.4182			2	EXHAUST SILENCER		C2
P35.4183			1	COVER		D3
P35.4184			1	HOLDER		A18
P35.4185	*		1	GRIPPER		B18
P35.4186	*		1	GRIPPER		B18
P35.4187	*		1	GRIPPER		B18
P35.4191			1	STRAP STOP		B17
P35.4192			1	STRAP STOP		B17
P35.4195			2	SPACER WASHER		B17
P35.4196			3	PINION		B18
P35.4197		P35.0226	1	END COVER		C17
P35.4198	*		1	CUTTER		C13
P35.4199			1	GUIDE		D13
P35.4201			1	GUIDE CASE		D13
P35.4203			1	SEESAW LEVER		D13
P35.4204			1	SEESAW LEVER		D14
P35.4205		P35.0227	1	THRUST PIECE		D14
P35.4206			1	CENTERING SLEEVE		D13
P35.4207			1	CONTROL HEAD		D1
P35.4209			1	DISK		D22
P35.4210			1	BOLT		D12
P35.4211			1	COVER		D19
P35.4212			1	COVER		C11
P35.4213			1	COVER		C16
P35.4214		P35.0201	1	NOZZLE		C6
P35.4302		P35.0229	1	RETAINER		E9
P35.4303		P35.0229	1	SUSPENSION BRACKET		D9
P35.4304		P35.0229	1	DISK		D10
P36.1232	*	P35.0225	8	VANE		A2
P36.1305		P35.0211	1	GUIDE		E24+
P36.1306		P35.0211	1	THROTTLE HOLDER		E23+

[ ] = Group

* = Wearing parts

© 2021 FROMM Holding AG
All rights reserved. Reproduction and duplication - also in extracts - are not permitted.

2 Drawing 49.0523.01

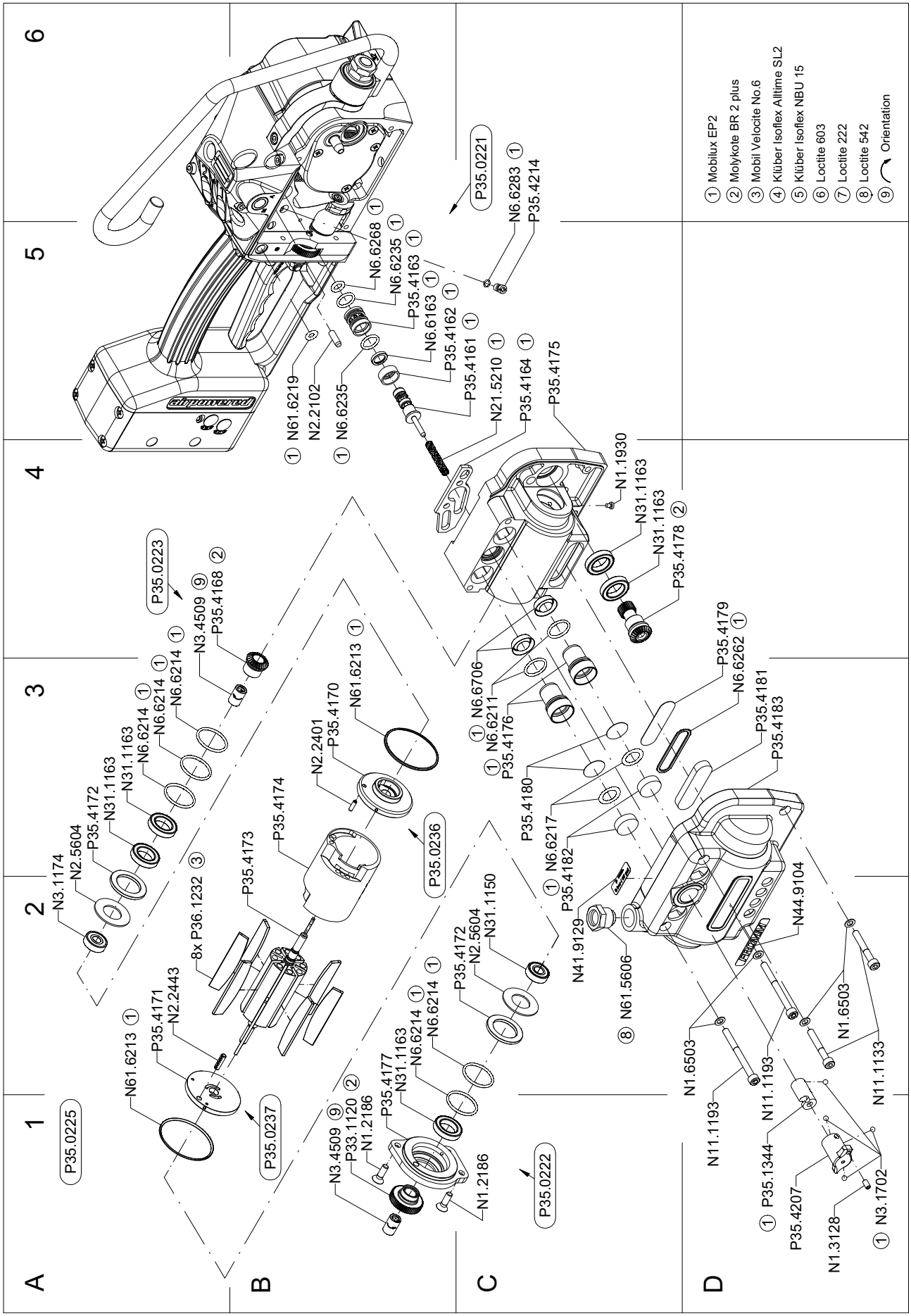

© 2021 FROMM Holding AG
All rights reserved. Reproduction and duplication - also in extracts - are not permitted.

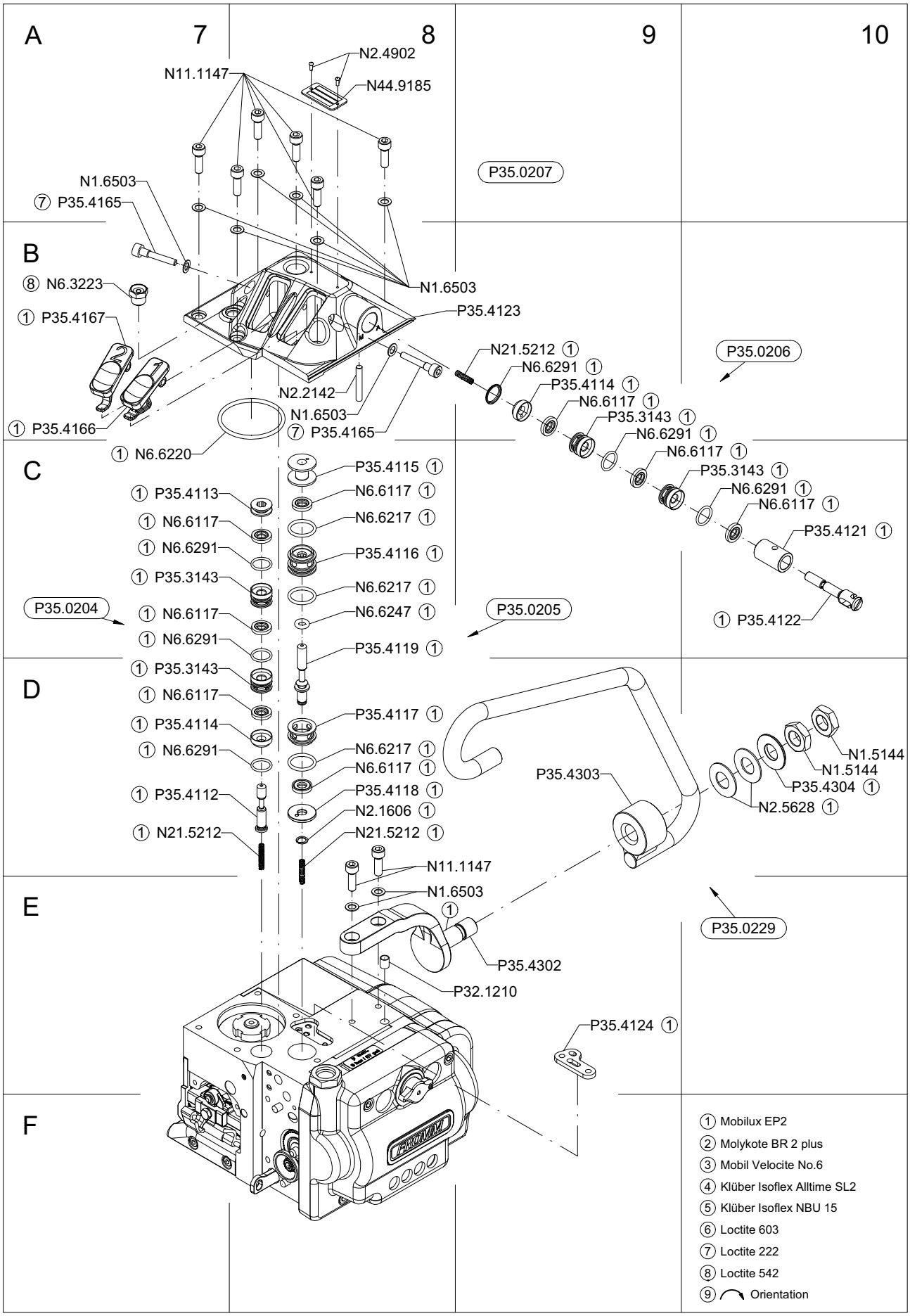

© 2021 FROMM Holding AG
All rights reserved. Reproduction and duplication - also in extracts - are not permitted.

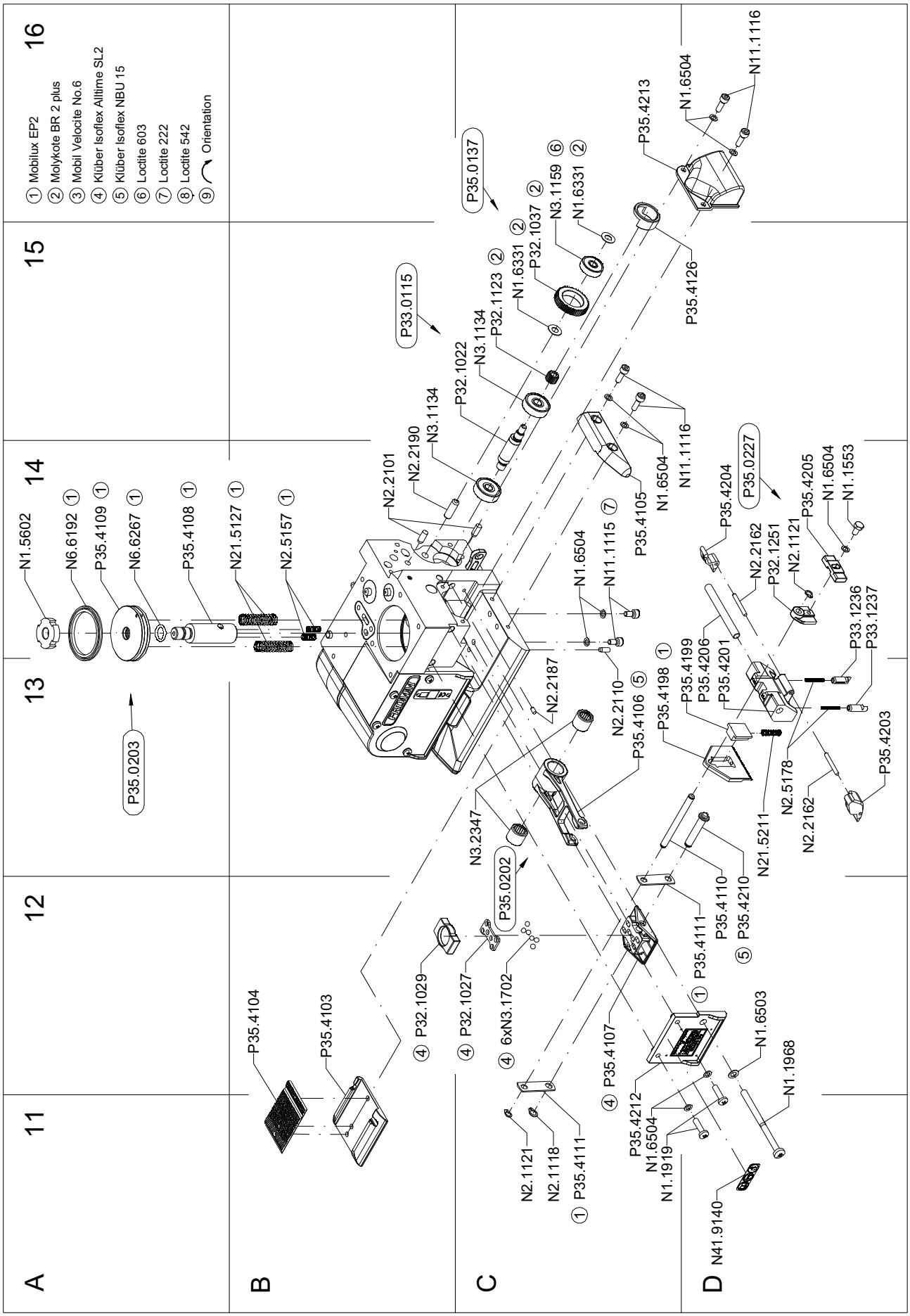

© 2021 FROMM Holding AG
All rights reserved. Reproduction and duplication - also in extracts - are not permitted.

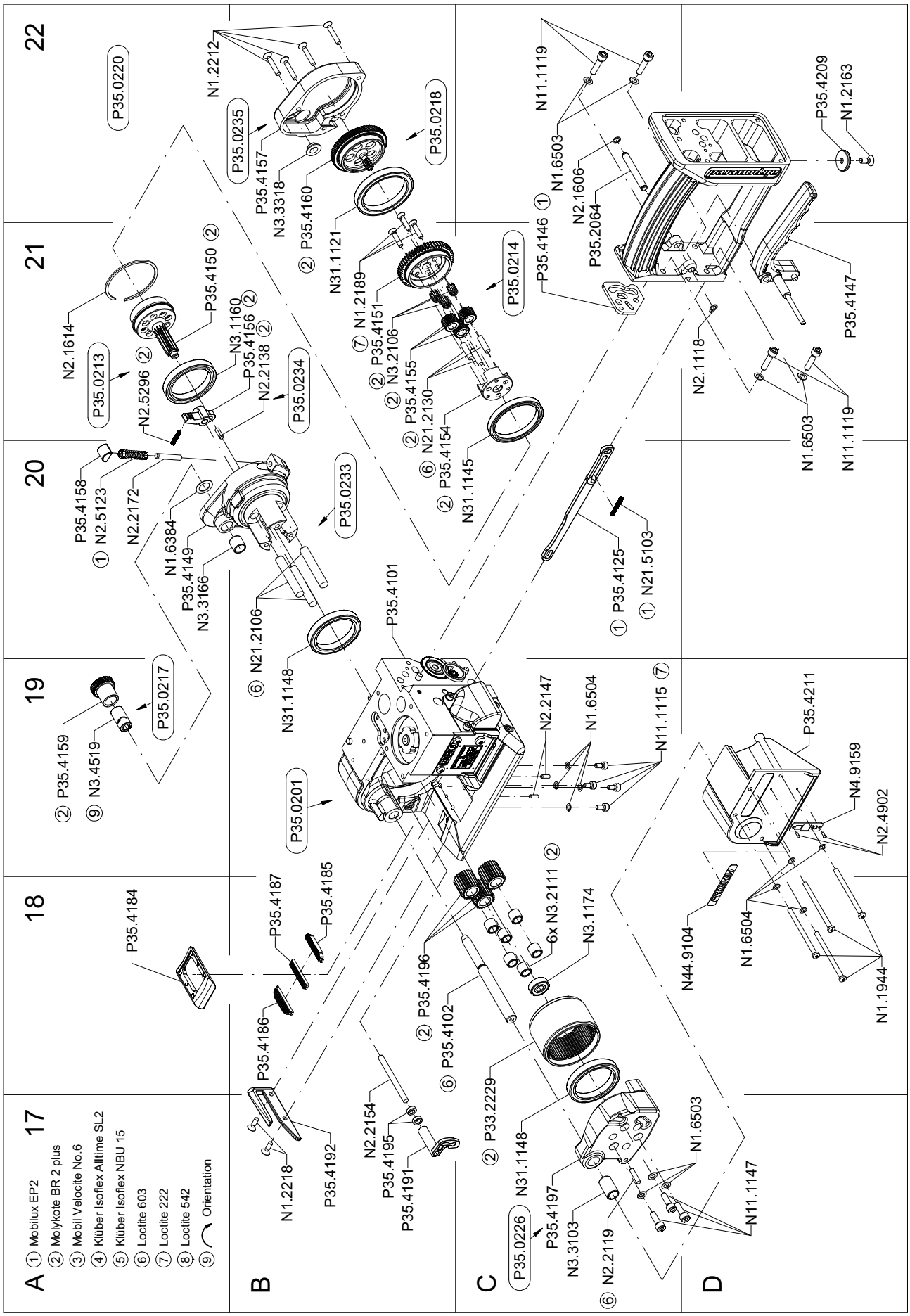

© 2021 FROMM Holding AG
All rights reserved. Reproduction and duplication - also in extracts - are not permitted.

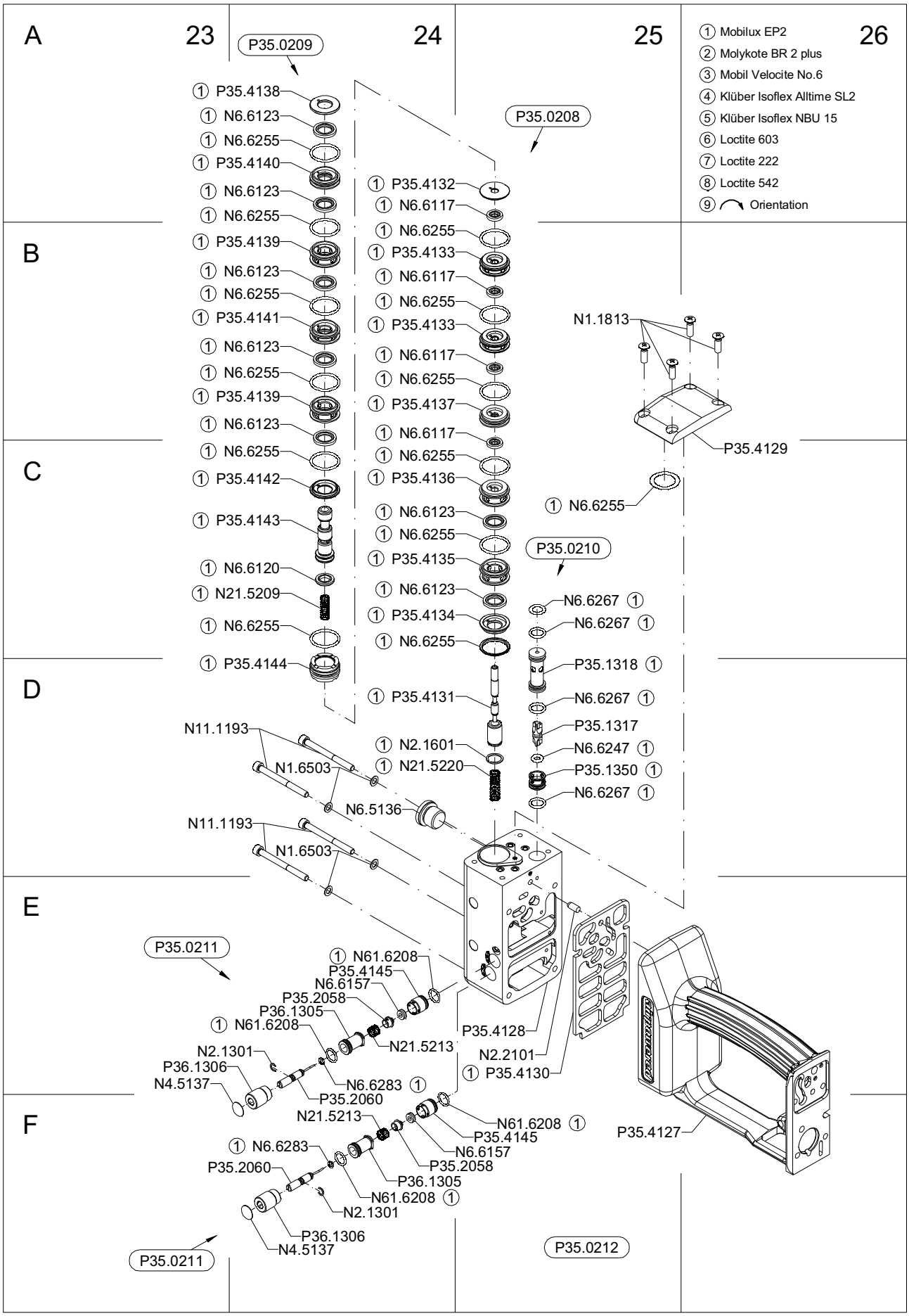

© 2021 FROMM Holding AG
All rights reserved. Reproduction and duplication - also in extracts - are not permitted.