SPARE PARTS LIST / DRAWINGS

BATTERY - POWERED PLASTIC STRAPPING TOOL MODEL P329 A/A

43.2722.01

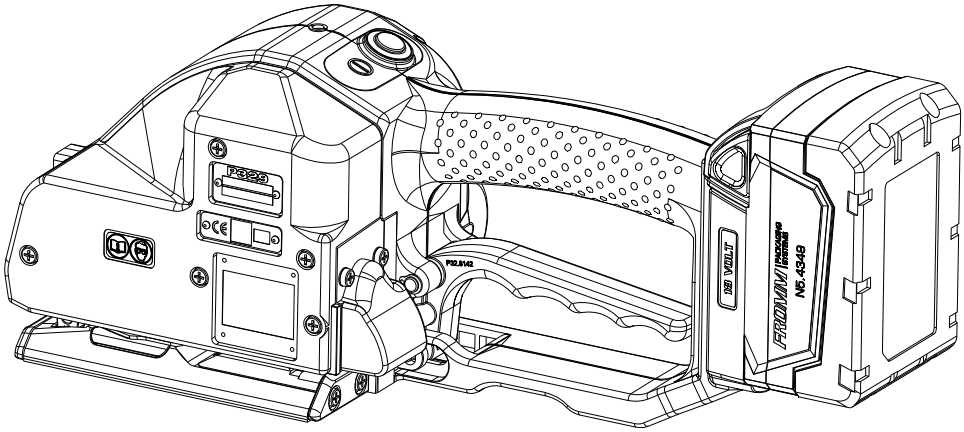

	Index	Page
1	Spare parts list 43.2722.01	2
2	Drawing 43.2722.01	6

43272201.een/DS/11.20

© 2020 FROMM Holding AG
All rights reserved. Reproduction and duplication - also in extracts - are not permitted.

1 Spare parts list 43.2722.01

43.2722.01	P329/16/0.65-1.05/A			P329.0002.01		23.04.20
Item-No.		in group	Pcs.	Description	Dimension	Field
N1.1196			3	SCREW	M4 X 16	D6
N1.1305			6	SCREW	M4 X 7.8	C2+
N1.1553		P35.0146	1	HEXAGON SCREW	M4 X 8	B12
N1.1910			2	FLAT HEAD SCREW	M4 X 12	B10
N1.1911			2	FLAT HEAD SCREW	M4 X 8	A3
N1.1927		P32.0220	1	FLAT HEAD SCREW	M4 X 60	D19
N1.1928			1	FLAT HEAD SCREW	M4 X 16	B6
N1.1934			1	FLAT HEAD SCREW	M4 X 50	B6
N1.1934		P32.0220	2	FLAT HEAD SCREW	M4 X 50	D19
N1.1943			2	FLAT HEAD SCREW	M4 X 40	B6
N1.1966		P32.0220	1	SCREW	M4 X 70	C19
N1.1972		P32.0220	1	SCREW	M4 X 78	D19
N1.1973			1	FLAT HEAD SCREW	M4 X 10	A6
N1.2188		P32.0205	3	COUNTERSUNK SCREW	M4 X 16	D13
N1.2222			2	COUNTERSUNK SCREW	M4 X 10	C1
N1.2239		P32.0208	3	COUNTERSUNK SCREW	M4 X 20	D14
N1.6305		P32.0220	1	SPACER WASHER	6 X 18 X 0.5	B24
N1.6331		P32.0220	3	SPACER WASHER	6 X 12 X 0.5	C18+
N1.6386		P32.0220	1	SPACER WASHER	9 X 15 X 0.50	D17
N1.6504			18	SAFETY WASHER	M4	B4+
N1.6504		P32.0220	5	SAFETY WASHER	M4	D20+
N1.6504		P35.0146	1	SAFETY WASHER	M4	B12
N1.7207		P32.0220	1	PT-SCREW	3 X 40	C20
N1.7211		P32.0220	8	PT-SCREW	3 X 20	C19+
N1.7222		P32.0220	1	PT-SCREW	2.2 X 5	B21
N2.1118		P32.0220	2	SECURITY RING	6	B9+
N2.1121			1	SECURITY RING	5	B12
N2.1121		P32.0220	4	SECURITY RING	5	C11+
N2.1606		P32.0220	1	SPRING RING	SW6	C19
N2.1610		P32.0208	1	SPRING RING	SB44	C14
N2.2110		P32.0218	1	PARALLEL PIN	4 m6 X 10	D8
N2.2119		P32.0222	1	PARALLEL PIN	4 m6 X 18	D4
N2.2124			1	PARALLEL PIN	4 m6 X 40	C2
N2.2126		P32.0207	1	PARALLEL PIN	5 m6 X 26	B15
N2.2142		P32.0206	1	PARALLEL PIN	4 m6 X 28	C16
N2.2145		P32.0205	3	PARALLEL PIN	4 h6 X 18	C14
N2.2147		P32.0218	2	PARALLEL PIN	3 m6 X 10	C2
N2.2180		P32.0208	1	PARALLEL PIN	4 m6 X 16	C16
N2.2187		P32.0218	1	PARALLEL PIN	3 m6 X 6	C9
N2.2190		P32.0220	1	PARALLEL PIN	6 h6 X 18	C18
N2.2193			1	PARALLEL PIN	3 m6 X 32	C12
N2.2443		P32.0203	1	DOWEL PIN	4 X 15	A8
N2.3364		P32.0220	1	FEATHER KEY	2 X 2 X 6	C7
N2.4902			2	HAMMER HEAD BOLT	1.85 X 4.76	A6
N2.4902		P32.0221	2	HAMMER HEAD BOLT	1.85 X 4.76	A6
N2.5157		P32.0220	2	PRESSURE SPRING	0.6 X 4.8 X 20/15.5	B8
N2.5178			2	PRESSURE SPRING	0.32X2.82X20.5/20.5	C12
N2.5237			1	PRESSURE SPRING	0.8 X 4.8 X 25/18.5	C11
N2.5296		P32.0208	1	PRESSURE SPRING	0.5 X 4 X 24/16.5	C16
N21.2140		P32.0220	1	DOWEL PIN	2 X 16	D7

[ ] = Group * = Wearing parts

© 2020 FROMM Holding AG
All rights reserved. Reproduction and duplication - also in extracts - are not permitted.

43.2722.01	P329/16/0.65-1.05/A			P329.0002.01		23.04.20
Item-No.		**in group**	**Pcs.**	**Description**	**Dimension**	**Field**
N21.2144		P32.0220	1	PARALLEL PIN	3 h6 X 30	B16
N21.2145		P32.0207	3	PARALLEL PIN	5 h6 X 37.3	B3
N21.5124		P32.0220	1	PRESSURE SPRING	0.9 X 10 X 15/5.5	B19
N21.5138		P32.0203	1	PRESSURE SPRING	2.5 X 14.2 X 33.5/7.5	A8
N21.5139		P32.0220	1	PRESSURE SPRING	1.25 X 9.8 X 45/14.5	B15
N21.5219		P32.0220	1	PRESSURE SPRING	0.43 X 3.6 X 32.9/27.5	B13
N3.1134		P32.0202	1	BALL BEARING	7 X 22 X7	A15
N3.1134		P32.0220	1	BALL BEARING	7 X 22 X7	B16
N3.1159		P33.0204	1	BALL BEARING	6 X 19 X 6	B17
N3.1172			2	BALL BEARING	30 X 42 X 7	B3+
N3.1178		P32.0204	1	BALL BEARING	35 X 44 X 5	B15
N3.1185			1	BALL BEARING	5 X 16 X 5	C5
N3.1185		P32.0208	1	BALL BEARING	5 X 16 X 5	D16
N3.1702		P32.0220	6	BALL	4 MM	C10
N3.2105		P32.0205	3	NEEDLE CAGE	K 4 X 7 X 7 TN	C14
N3.2107			3	NEEDLE CAGE	K 5 X 9 X 13 TN	B4
N3.2347		P32.0144	2	NEEDLE BUSH	10 X 14 X 12	A15+
N3.2362		P32.0214	1	NEEDLE BUSH	6 X 10 X 8	B24
N3.3150		P32.0222	1	SLIDE-BEARING	8 X 10 X 12	D5
N3.3172		P32.0207	1	SLIDE-BEARING	8 X 10 X 10	B17
N3.4509	*	P32.0209	1	NEEDLE FREE WHEELING	6 X 10 X 15	D17
N3.4509	*	P32.0212	1	NEEDLE FREE WHEELING	6 X 10 X 15	D21
N3.4520	*	P32.0211	1	FREE-WHEELING	6 X 10 X 12	D22
N31.1118		P32.0220	2	BALL BEARING	10 X 19 X 5	B22
N31.1120		P32.0205	1	BALL BEARING	4 X 11 X 4	C14
N31.1120		P32.0220	1	BALL BEARING	4 X 11 X 4	C22
N31.1151		P32.0220	1	BALL BEARING	17 X 30 X 7	D22
N31.1163		P32.0212	1	BALL BEARING	15 X 24 X 5	D21
N31.1169		P32.0205	1	BALL BEARING	40 X 50 X 6	D16
N31.3115		P32.0218	1	SLIDE-BEARING	6 X 8 X 6	B9
N4.3236		P32.0220	1	TOOTHED BELT	9 MM	A23
N4.9159		P32.0221	1	LABEL	<<CE>>	A6
N41.9127		P32.0221	1	ADHESIVE LABEL	20 X 10 X 0.1	B5
N43.9164		P32.8196	1	ADHESIVE LABEL	WEEE	C19
N43.9192		P32.8103	1	ADHESIVE LABEL	18 Volt	A22
N43.9192		P32.8196	1	ADHESIVE LABEL	18 Volt	B19
N44.9104		P32.8196	1	ADHESIVE LABEL	<<FROMM>>	D21
N44.9170		P32.8196	1	ADHESIVE LABEL		D19
N44.9185			1	TYPE PLATE		A6
N44.9190		P32.8103	1	ADHESIVE LABEL		A22
N5.2382		P32.8154	1	MICRO SWITCH		C23
N5.2702			1	COVER		C20
N51.1127		P32.0220	1	GEAR MOTOR		A21
N51.2194		P32.0230	1	INSERT PART		A19
N51.2199		N51.1111	3	CONTACT PLUG		C22
N51.5477		P32.8103	1	SPRING PIN		A22
N6.6224		P32.0220	2	O-RING	24 X 2	C21
N6.6232		P32.0220	1	O-RING	8 X 2	A20
N61.6220		P32.0220	2	O-RING	29.5 X 3	D23
P30.1210		P32.8201	1	HOLDING-DOWN CLAMP		C20
P31.1124		P32.0218	1	TUBE		B14
[P32.0144]		P32.0220	1	ROCKER		B15

[ ] = Group * = Wearing parts

© 2020 FROMM Holding AG
All rights reserved. Reproduction and duplication - also in extracts - are not permitted.

43.2722.01	P329/16/0.65-1.05/A			P329.0002.01		23.04.20
Item-No.		in group	Pcs.	Description	Dimension	Field
P32.0159		P32.0220	1	PINION		C22
[P32.0202]		P32.0220	1	WELDING EXCENTRIC		A14
[P32.0203]		P32.0220	1	SPRING BOLT		A7
[P32.0204]		P32.0208	1	GEAR WHEEL		B14
[P32.0205]		P32.0208	1	IDLER STEP		C13
[P32.0206]		P32.0208	1	LEVER		C16
[P32.0207]		P32.0208	1	GEAR BODY		C17+
[P32.0208]		P32.0220	1	GEAR		B13
[P32.0209]		P32.0220	1	GEAR WHEEL		C17
[P32.0211]		P32.0220	1	CONICAL GEAR WHEEL		D23
[P32.0212]		P32.0220	1	GEAR WHEEL		D21
P32.0213	*	P32.0220	1	MOTOR		D21
[P32.0214]		P32.0220	1	GEAR WHEEL		B23
[P32.0218]		P32.0220	1	BODY		A1+
[P32.0220]			1	BASE MODEL		D6+
[P32.0221]			1	COVER		A4
[P32.0222]			1	END COVER		D4
[P32.0230]		P32.0220	1	CIRCUIT BOARD		B21
P32.1022		P32.0202	1	WELDING EXCENTRIC		A15
P32.1024		P32.0144	1	ROCKER		A16
P32.1027		P32.0220	1	BALL CAGE		C10
P32.1028		P32.0220	1	BOLT		D11
P32.1029		P32.0220	1	THRUST PIECE		C10
P32.1032		P32.0220	1	DRIVING PIN		D11
P32.1035		P32.0220	2	DRIVER		D10+
P32.1215		P32.0220	1	HANDLE SHAFT		C19
P32.1251		P35.0146	1	PUSHER		B12
P32.1511	*	P32.0220	1	WELDING GRIPPER		D11
P32.1710			1	CENTERING SLEEVE		C12
P32.2009		P32.8201	2	TURNING BUTTON		C20
P32.2012		P32.0220	1	GUIDE		B16
P32.2016		P33.0204	1	GEAR WHEEL		C17
[P32.8103]		P32.0220	1	MOTOR HOUSING		A22
P32.8106			1	STEEL INSERT		D9
P32.8107	*		1	WELDING STOP GRIPPER		C10
P32.8108			1	HOLDER		C3
P32.8109	*		1	GRIPPER		D3
P32.8110	*		1	GRIPPER		D3
P32.8111	*		1	GRIPPER		D3
P32.8115		P32.0202	1	PINION		A14
P32.8116		P32.0203	1	SPRING SLIDE		A9
P32.8117		P32.0203	1	SPRING BOLT		B8
P32.8118			1	STRAP GUIDE PLATE		A3
P32.8120		P32.0220	1	MAGNET		D7
P32.8121		P32.0220	1	ECCENTRIC SHAFT		C7
P32.8122		P32.0220	1	TOOTHED BELT PULLEY		B9
P32.8125		P32.0220	1	PUSHER		B14
P32.8126		P32.0204	1	GEAR WHEEL		C15
P32.8127		P32.0205	1	PLANET SHAFT		C14
P32.8128		P32.0205	1	GEAR WHEEL		C13
P32.8129		P32.0208	1	GEAR WHEEL		D16
P32.8130		P32.0206	1	LEVER		C16

[ ] = Group

* = Wearing parts

© 2020 FROMM Holding AG
All rights reserved. Reproduction and duplication - also in extracts - are not permitted.

43.2722.01	P329/16/0.65-1.05/A			P329.0002.01		23.04.20
Item-No.		**in group**	**Pcs.**	**Description**	**Dimension**	**Field**
P32.8131		P32.0207	1	GEAR BODY		C17
P32.8132		P32.0208	1	GEARING COVER		D15
P32.8133		P32.0220	1	PUSHER		C23
P32.8134		P32.0209	1	GEAR WHEEL		D17
P32.8136		P32.0220	1	HOUSING		B24
P32.8137		P32.0218	1	SWIVEL SHAFT		A18
P32.8138		P32.0211	1	CONICAL GEAR WHEEL		D22
P32.8139		P32.0212	1	GEAR WHEEL		D21
P32.8140		P32.0220	1	RETAINER		A22
P32.8141		P32.0220	1	COVERING		B21
P32.8142		P32.0220	1	HANDLE LEVER		B21
P32.8153		P32.0214	1	GEAR WHEEL		B24
[P32.8154]		P32.0220	1	TOUCH CONTACT-SWITCH		A21
P32.8157		P32.0218	1	BODY		C7
P32.8158		P32.0221	1	COVER		A4
P32.8159		P32.0222	1	END COVER		C5
P32.8168			1	STRAP STOP		B1
P32.8177			1	STRAP GUIDE		D4
P32.8195			1	COVER		C9
[P32.8196]		P32.0220	1	MOTOR HOUSING		B19
P32.8198			1	INSERT PART		D9
[P32.8201]		P32.0230	1	CIRCUIT BOARD		B20
[P33.0204]		P32.0220	1	GEAR WHEEL		B18
P33.2115		P32.8201	1	TURNING BUTTON		C20
P33.2127		N51.1111	3	SHRINKABLE HOSE		C22
P33.2145		P32.0220	1	DISK		B21
P33.2155		P32.0220	1	DOWEL		C22
[P35.0146]			1	PUSHER		C12
P35.3104		P32.0205	3	IDLER GEAR		C13
P35.3201			3	IDLER GEAR		B4
P35.3203	*		1	TENSIONING WHEEL		C4
P35.3214	*		1	CUTTER		C11
P35.3215			1	GUIDE CASE		B11
P35.3216			1	GUIDE PIN		D12
P35.3217			1	GUIDE PIN		D12
P35.3220			1	SEESAW LEVER		B11
P35.3221			1	SEESAW LEVER		C12
P35.3223		P35.0146	1	THRUST PIECE		B12

[ ] = Group

* = Wearing parts

© 2020 FROMM Holding AG
All rights reserved. Reproduction and duplication - also in extracts - are not permitted.

2 Drawing 43.2722.01

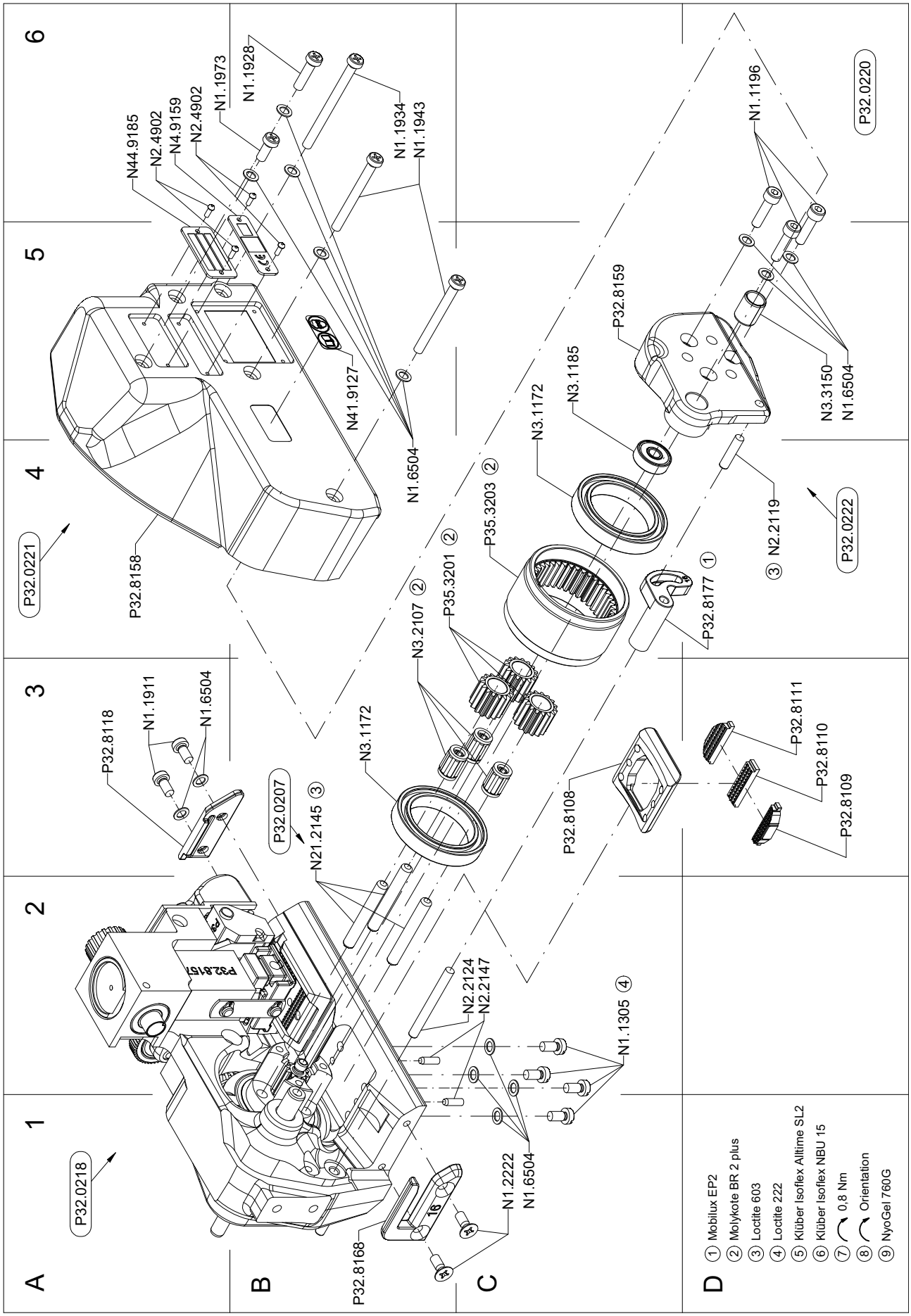

© 2020 FROMM Holding AG
All rights reserved. Reproduction and duplication - also in extracts - are not permitted.

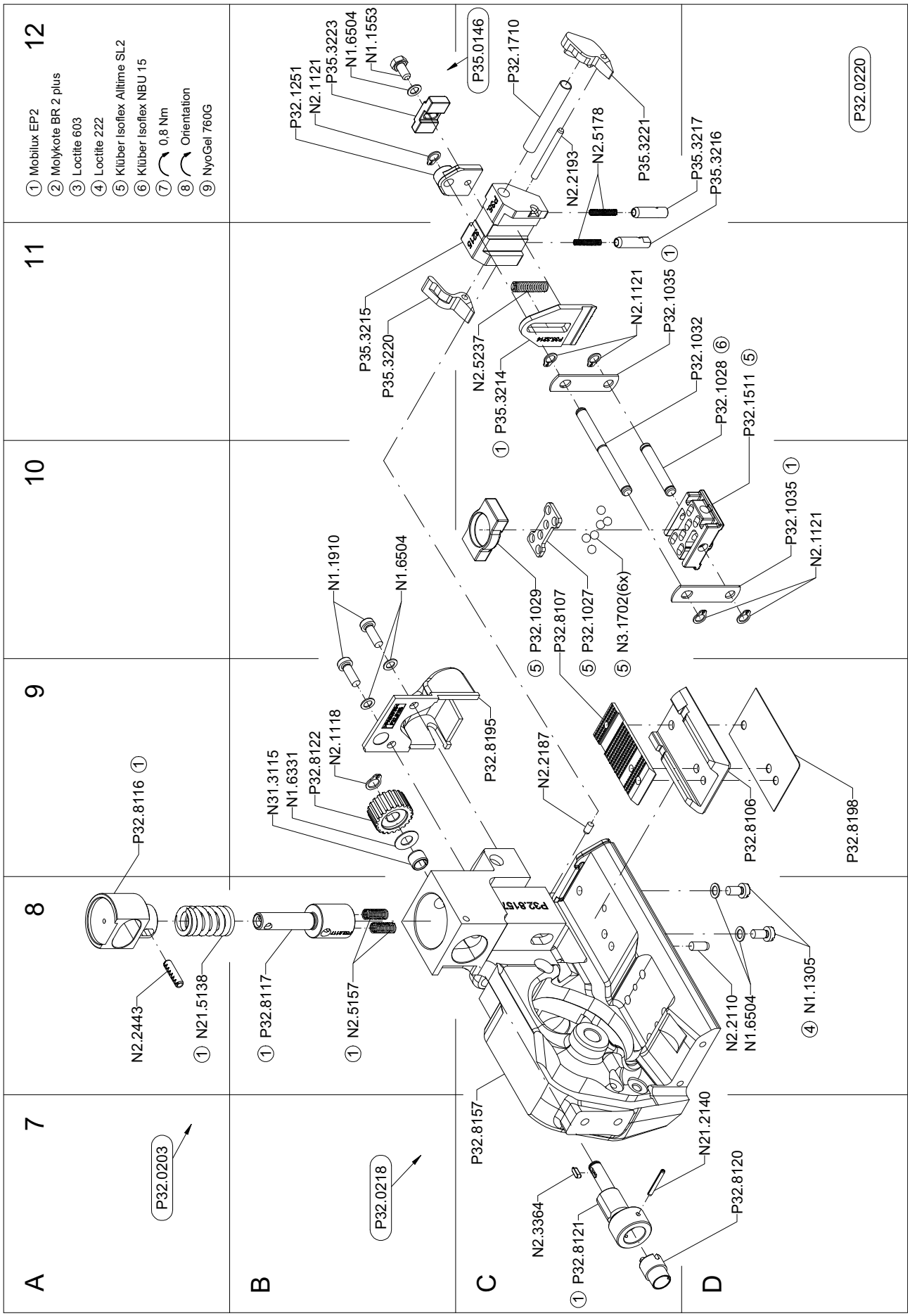

© 2020 FROMM Holding AG
All rights reserved. Reproduction and duplication - also in extracts - are not permitted.

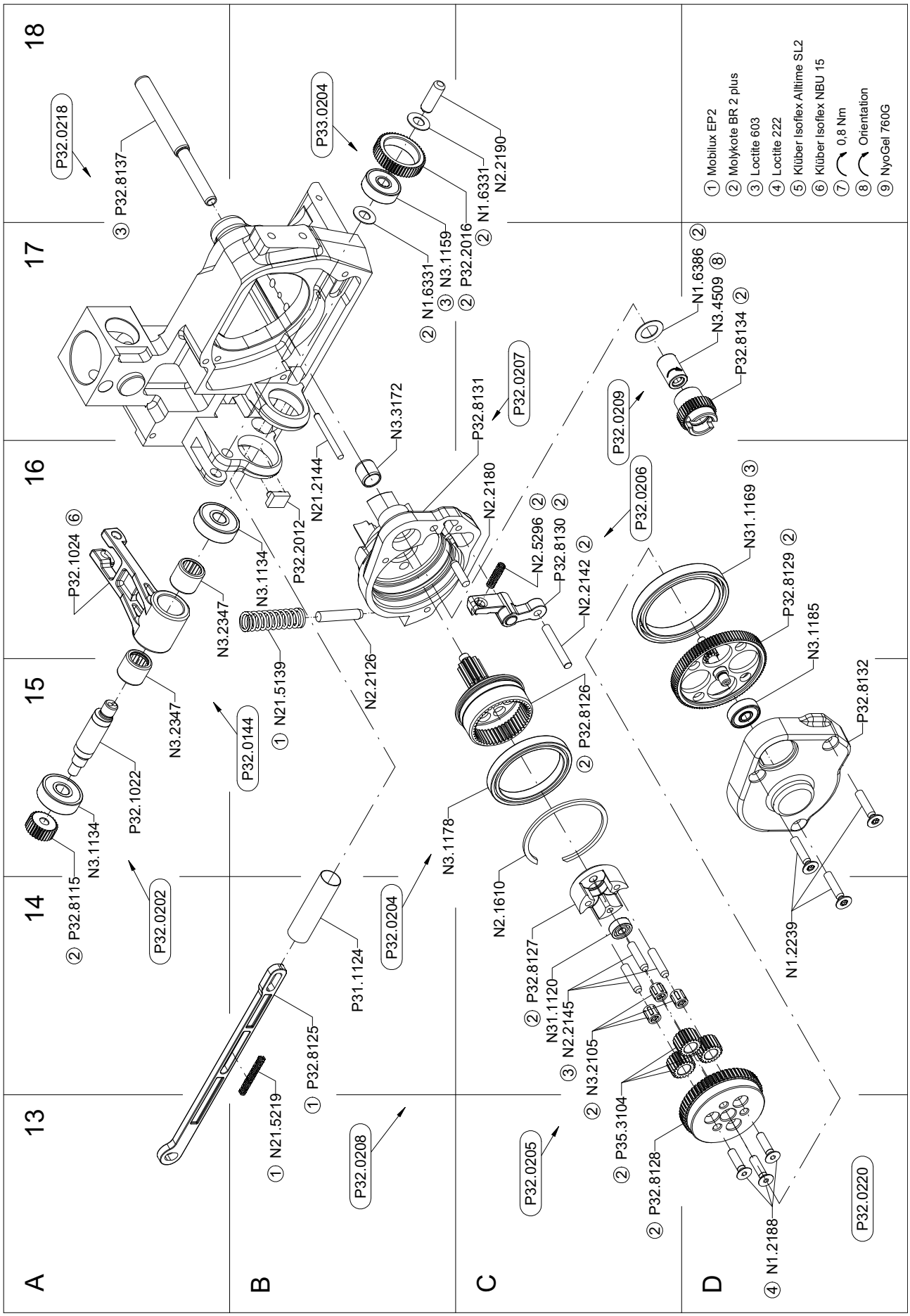

© 2020 FROMM Holding AG
All rights reserved. Reproduction and duplication - also in extracts - are not permitted.

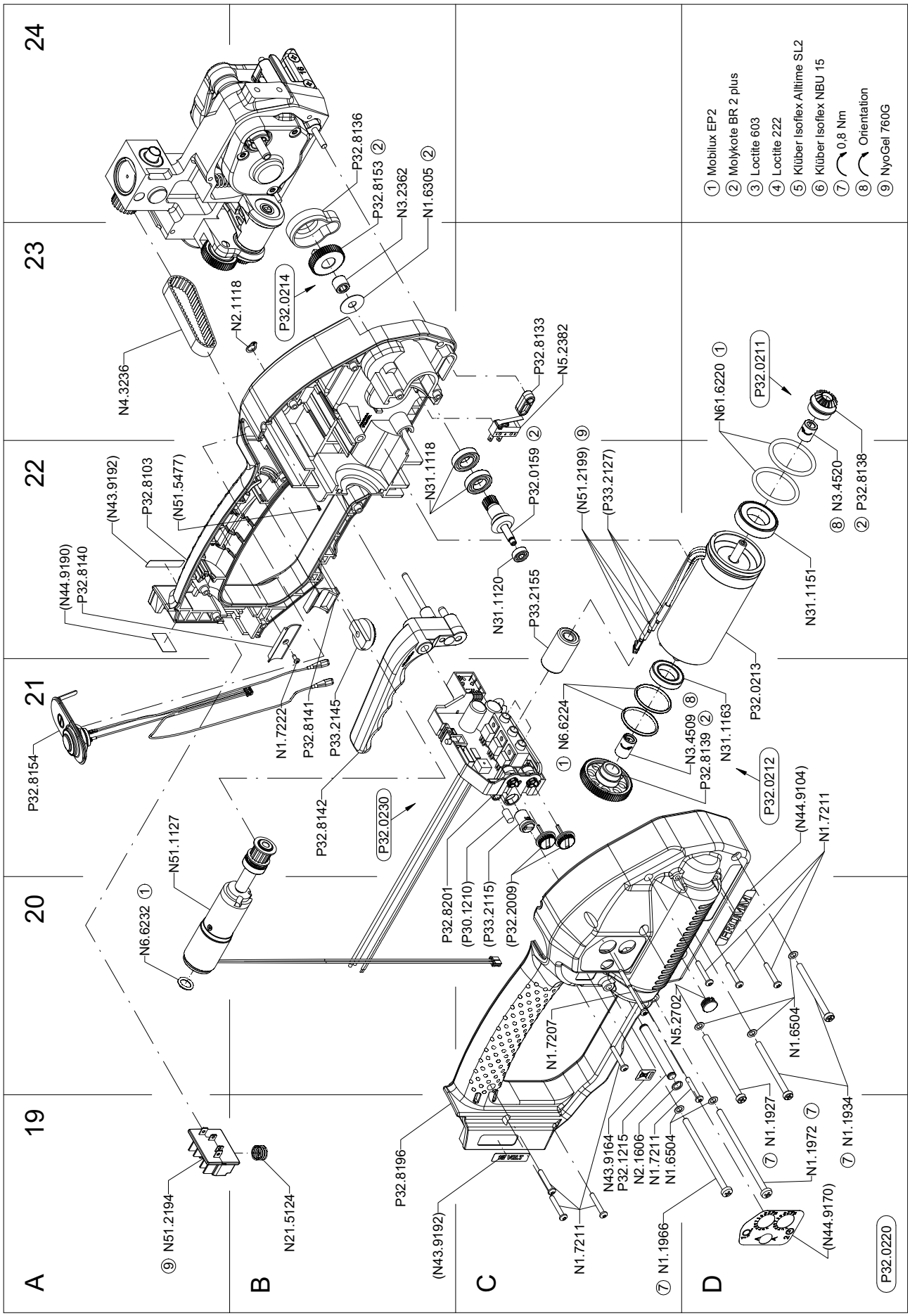

© 2020 FROMM Holding AG
All rights reserved. Reproduction and duplication - also in extracts - are not permitted.